FEMALE END VIEW

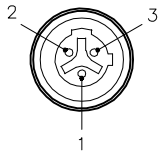

1 = GREEN/YELLOW
2 = BLACK
3 = WHITE

SPECIFICATIONS

CONTACT CARRIER MATERIAL/COLOR	NYLON/BLACK
CONTACT MATERIAL/PLATING	BRASS/GOLD
HOUSING MATERIAL/FINISH	STAINLESS STEEL/PASSIVATED
RATED CURRENT [A]	4.0 A
RATED VOLTAGE [V]	250 V
CONDUCTOR INSULATION MATERIAL	PVC
NUMBER OF CONDUCTORS [AWG]	3x18 AWG
TEMPERATURE RATING	−40°C to +105°C (−40°F to +221°F)
PROTECTION CLASS	NEMA 1,3,4,6P AND IEC IP67, IP68, IP69K

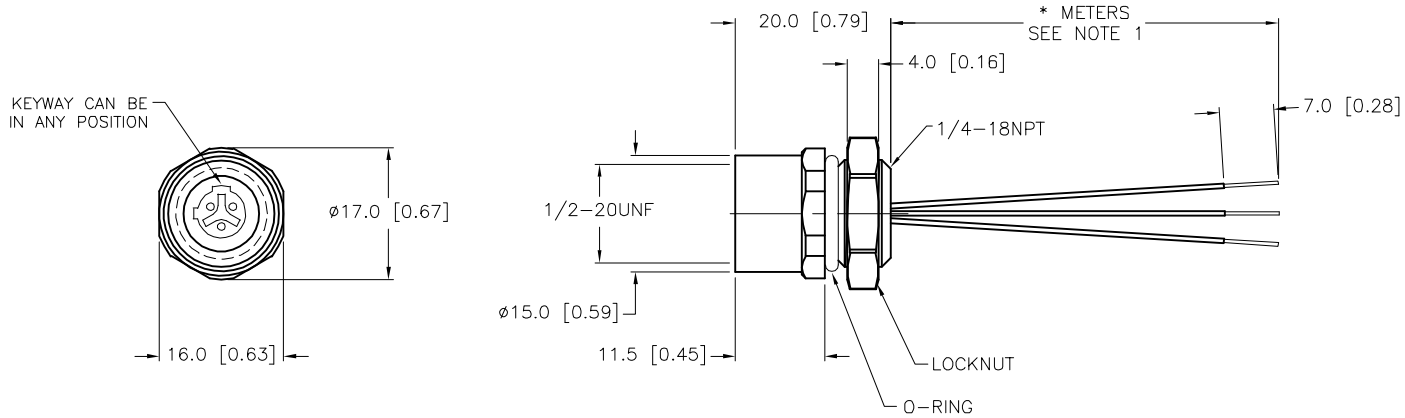

SOURCE DRAWING - FOR REFERENCE ONLY

NOTES:

1. "*" INDICATES LEAD LENGTH IN METERS. CONTACT TURCK TO ORDER SPECIFIC LENGTHS.

2. "/S662" DESIGNATES 18 AWG CONDUCTORS AND CUSTOM WIRING.

REV	DESCRIPTION	BY	DATE	ECO NO.
B	UPDATED GRN CONDUCTOR TO GRN/YEL PER ECO	TV	08/30/17	61844

RELATED DOCUMENTS
1.
2.
3.
4.

3RD ANGLE PROJECTION

THIS DRAWING IS CONFIDENTIAL AND THE PROPERTY OF TURCK INC. USE OF THIS DOCUMENT WITHOUT WRITTEN PERMISSION IS PROHIBITED.

TURCK

3000 CAMPUS DRIVE
MINNEAPOLIS, MN 55441
1−800−544−7769
(763) 553−7300
(763) 553−0708 fax
www.turck.us

MATERIAL

FINISH

ALL DIMENSIONS DISPLAYED ON THIS DRAWING ARE FOR REFERENCE ONLY

CONTACT TURCK FOR MORE INFORMATION

DRFT CK | DATE 07/27/11
APVD | SCALE 1=1.0

UNIT OF MEASUREMENT
MILLIMETER [INCH]
DO NOT SCALE THIS DRAWING

DESCRIPTION
FKBV 3−*/18.25/S662

IDENTIFICATION NO.

REV B

FILE: 777027942

SHEET 1 OF 1